CW-14ABE
ECHO BOX
(D-152278)
WEIGHT 40 LBS.

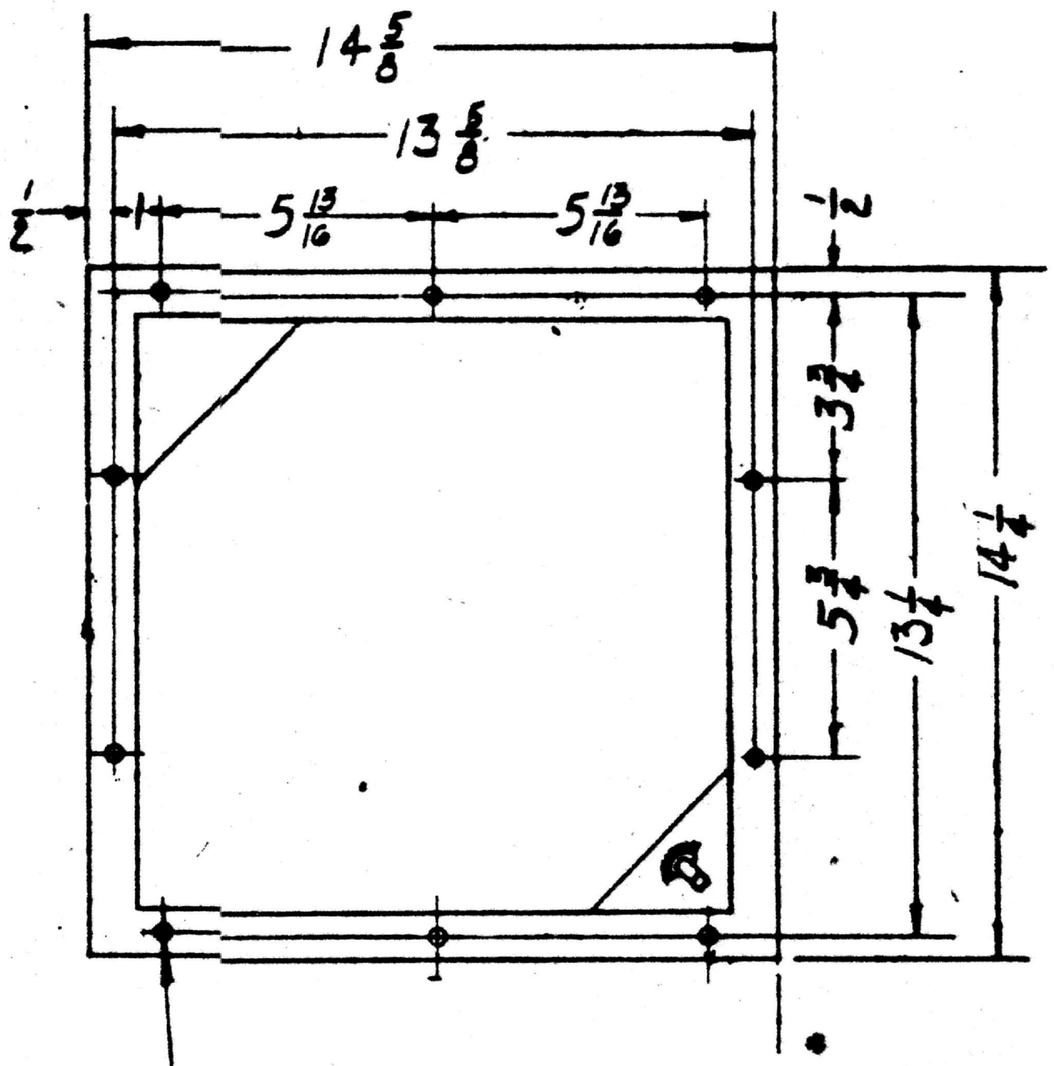

10 MTG. HOLES
FOR 5/16 SCREWS

CID-14ABF
DIRECTIONAL COUPLER
(D-152583)
WEIGHT 3 LBS.

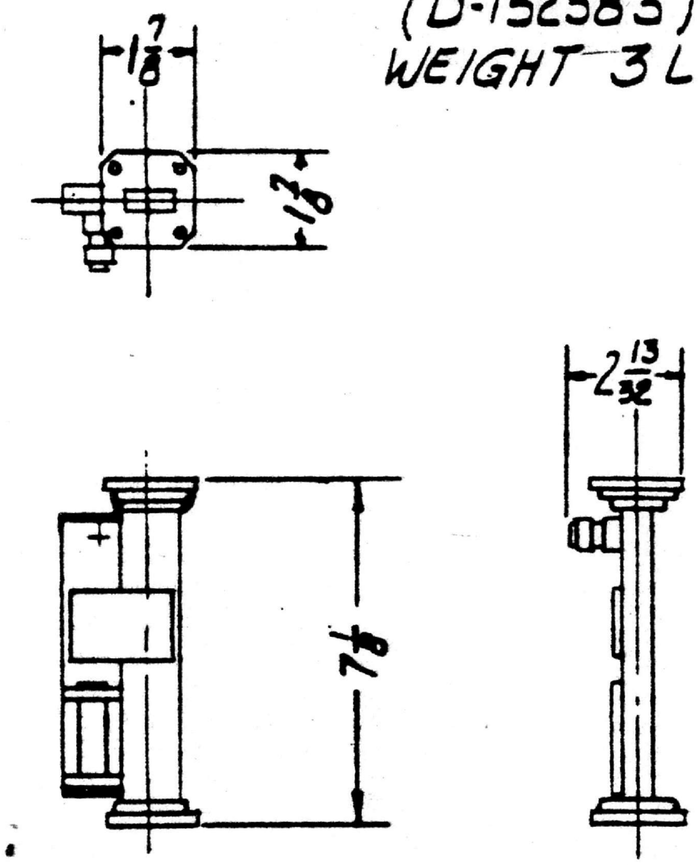

UNIT 1E
MOUNTED WITHIN UNIT 1

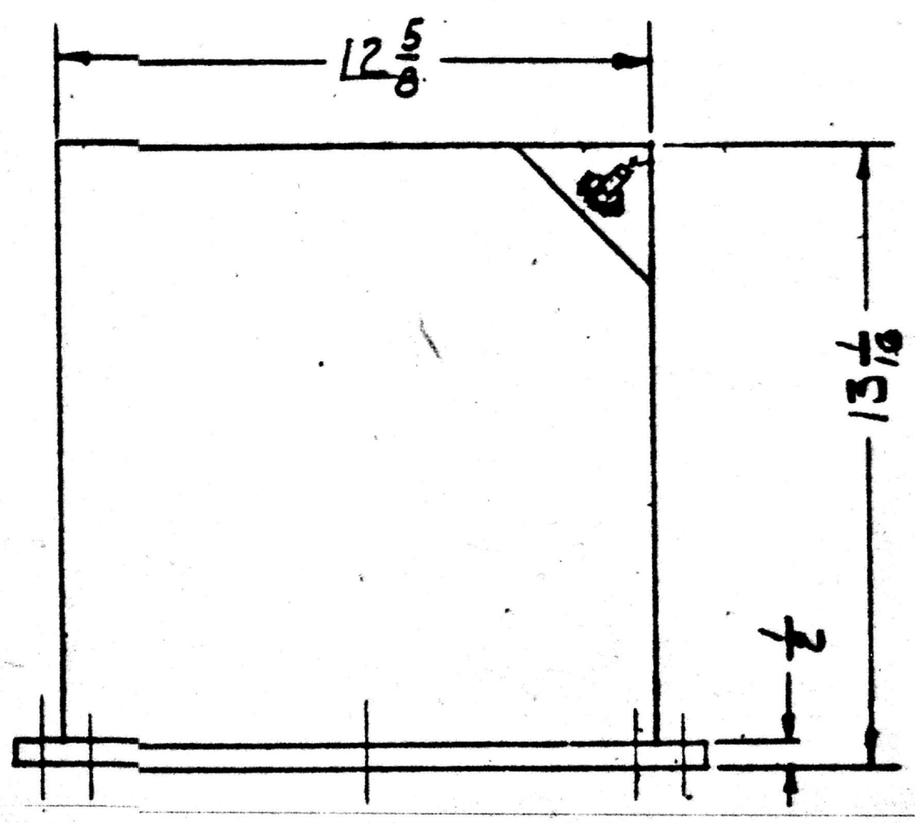

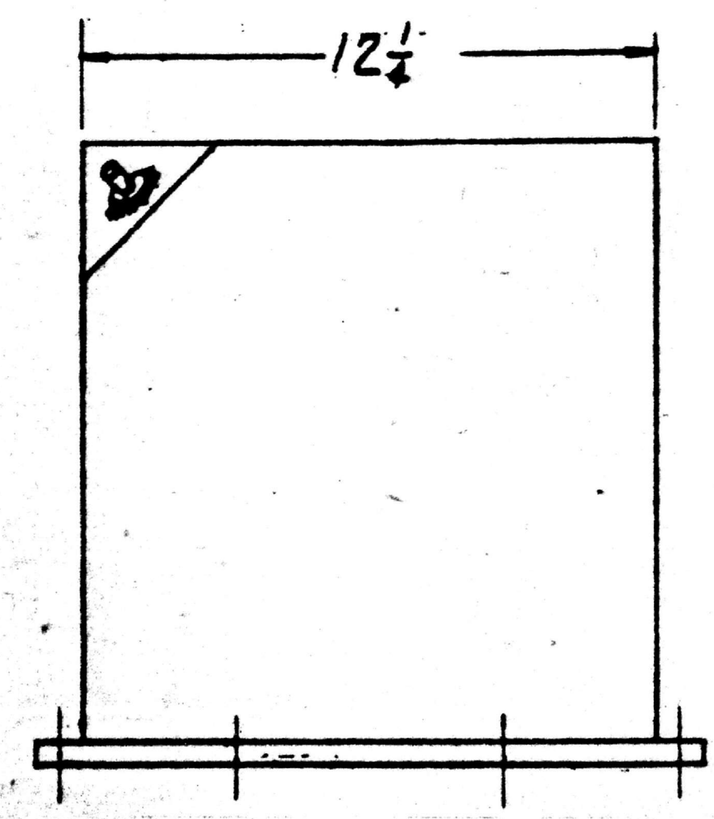

UNIT 1G MOUNTED WITHIN UNIT 1

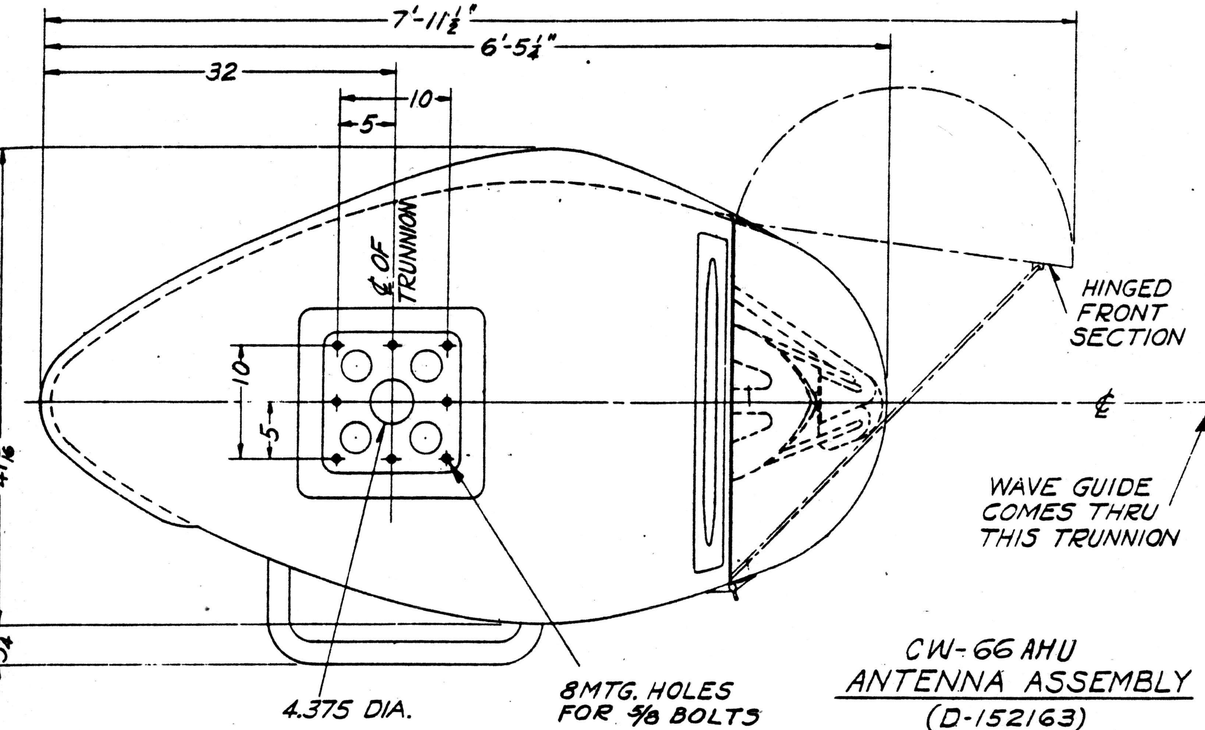

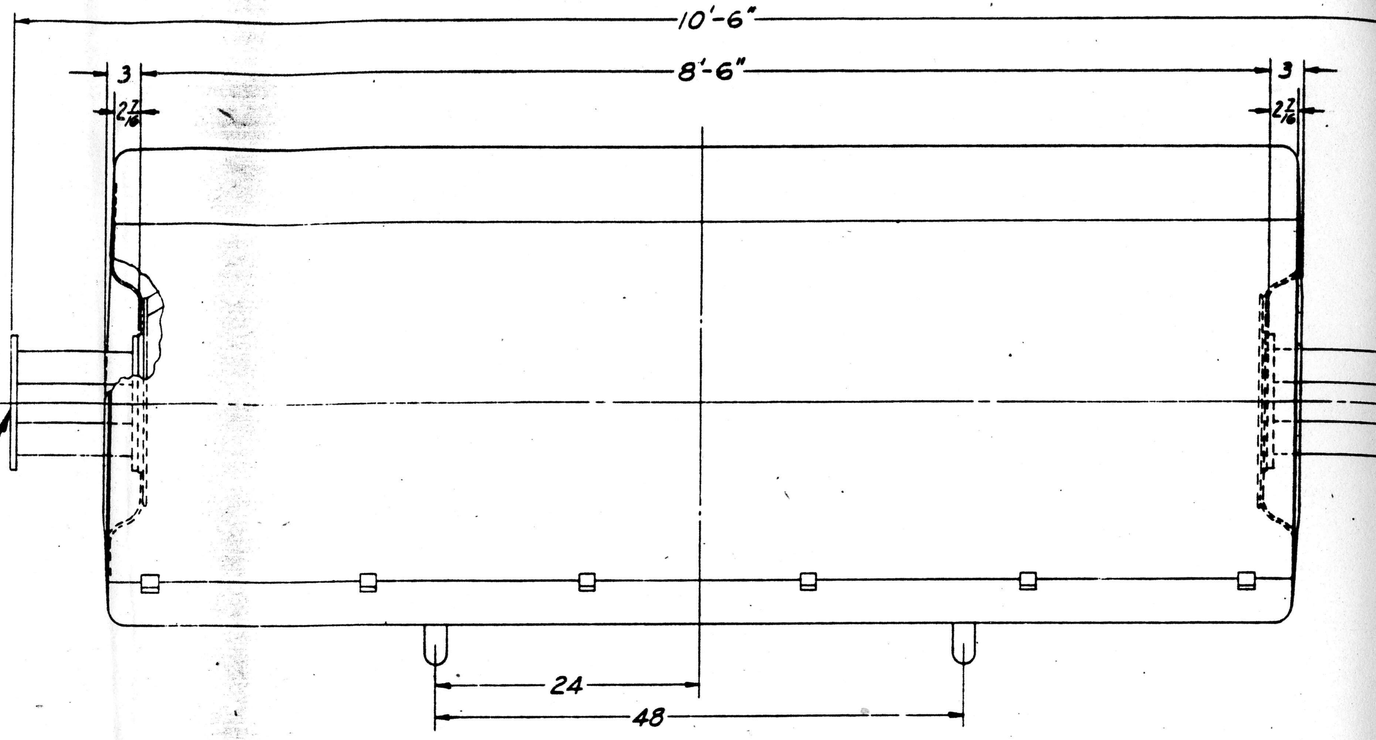

CW-66 AHU
ANTENNA ASSEMBLY
(D-152163)

SCALE 1/8

WEIGHT 1291 LBS. COMPLETE WITH COVER AND COMPONENT UNITS.

UNIT 1

CW-66AHT
DUMMY ANTENNA

(X-66325-A)
WEIGHT 2 LBS.
DISSIPATION 30 WATTS

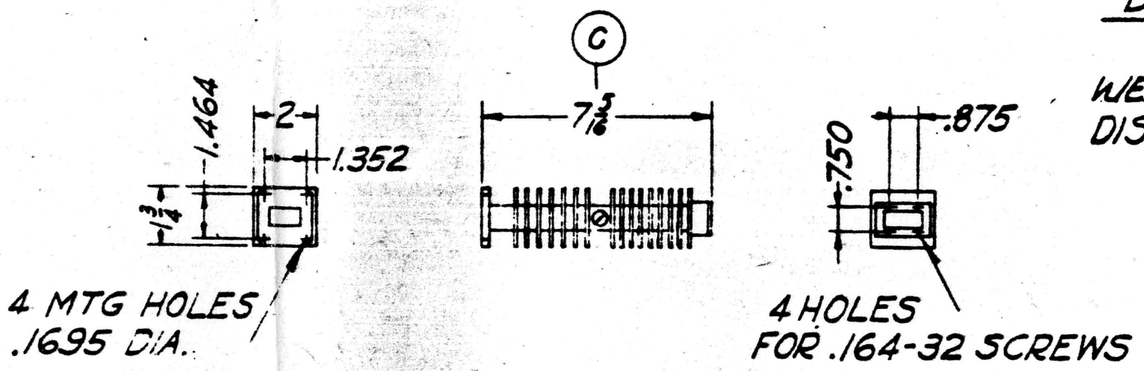

UNIT 1B MOUNTED WITHIN UNIT 1

B → FOR LIST OF OUTLINE DRAWINGS AND WIRING DIAGRAMS FOR INSTALLING EQUIPMENT SEE SK. NO. 139815

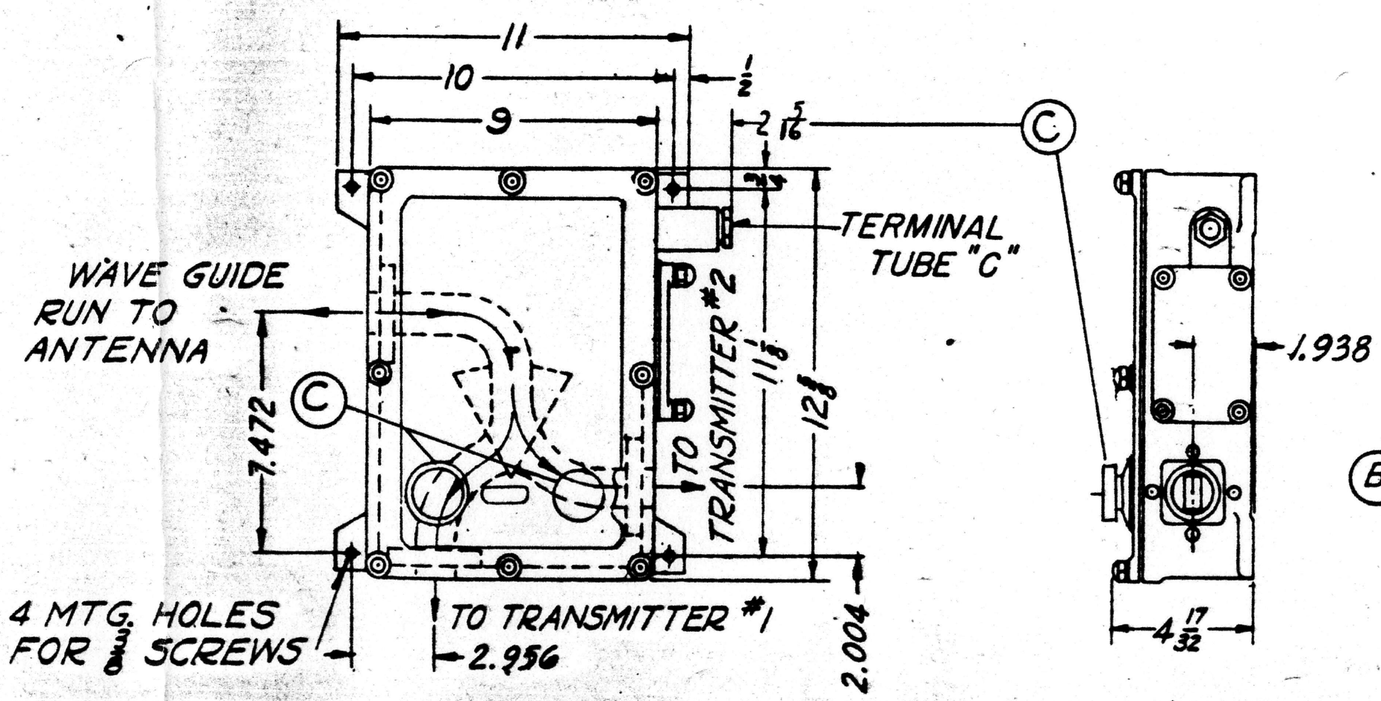

B → REVISED TO BRING UP TO DATE WITH MANUFACTURER'S DATA.

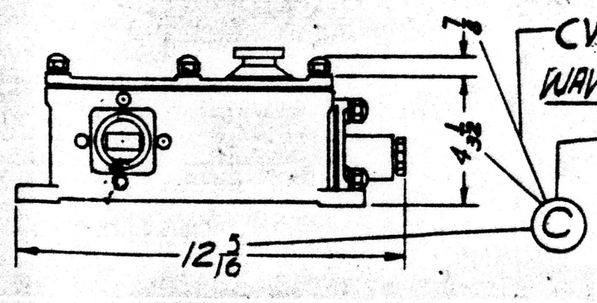

CW OR CGP-24AAN
WAVE GUIDE SWITCHING UNIT
(D-153041)
WEIGHT 20 LBS.
DISSIPATION 20 WATTS

UNIT 1D MOUNTED WITHIN UNIT 1

UNIT 2 MOUNTED BETWEEN UNITS 1 & 3

B

D-150G59 (MARK 13 MOD 0) RADAR EQUIPMENT UNIT OUTLINE DIMENSIONS ROTATING STRUCTURE	BELL TELEPHONE LABORATORIES INCORPORATED NEW YORK, N.Y.
APPL'S / DR. C.M.N. / CH. / ENG. K.H. MULLER	BX-21211
REPRODUCTION OF DRAWING NO. 492977, DATED 5 OCT. 1944	

REVISIONS

LET	NUMBER	DATE
B_3	8333	3-2-45
C_5	9260	6-18-45

EXAMINED

SECTION	OFFICER OF SECTION	DATE
PLANNING ENGINEER		3-7-45
DESIGN		3/7/45
CHIEF ENGINEER		3/7
HEAD ENGINEER	—	—
PRINCIPAL ENGINEER		3/6/45
SENIOR ENGINEER		3/6/45

CHECKED

ENGINEER DRAWN BY	ENG'R. (MAT'L) DATE

RADAR EQUIPMENT MARK 13 MOD. 0

UNIT
OUTLINE DIMENSIONS
ROTATING STRUCTURE
ANTENNA ASSEMBLY,
ECHO BOX, DIRECTIONAL COUPLER
WAVE GUIDE SWITCHING UNIT,
DUMMY ANTENNA

SCALE: 1/4 & 1/8

NAVY DEPARTMENT
BUREAU OF ORDNANCE
WASHINGTON, D.C.
7 MARCH, 1945

BY DIRECTION OF THE CHIEF OF BUREAU

CONTRACT	CLASSIFICATION	BU. OF ORD. DRWG. NO.
NOrd 4748	FIRE CONTROL EQUIPMENT	492977

RESTRICTED

WARNING: - THE DISCLOSURE OF NATIONAL DEFENSE SECRETS IS A PENAL OFFENSE PUNISHABLE